Rev	Date	Drawn	Checked	Description

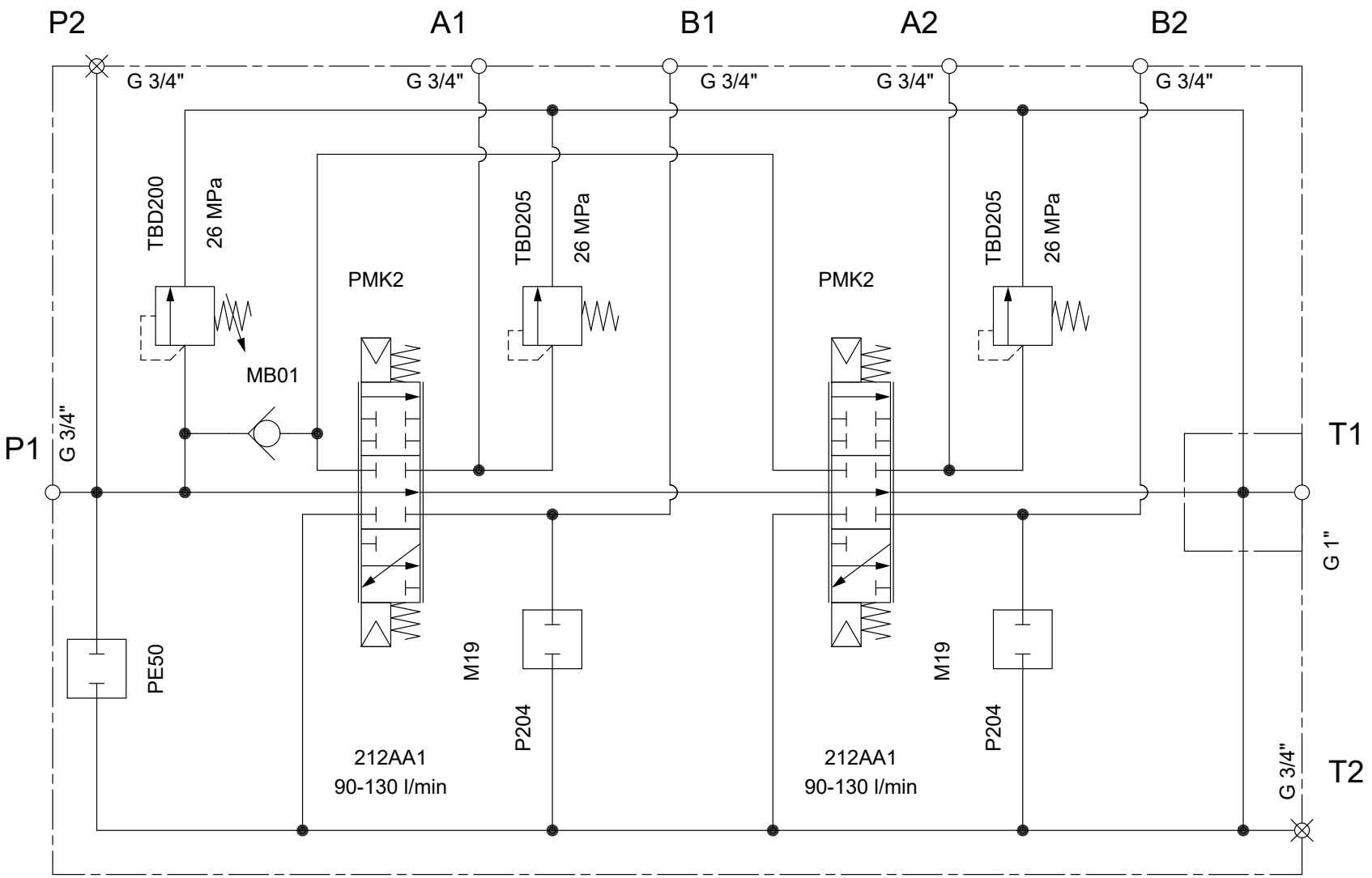

Customer :		This document is confidential and may not be copied nor disclosed to a third party without written consent.		
Date : 2025-09-01		Drawn by : johol	AMAB Hydraul	AMAB Hydraul
Date :		Checked by :		
Material :		Weight :		
Paper Size : A4	Page : 1	Status	Project number	Drawing Number 8772740201 Schema
Scale :	Pages : 1			